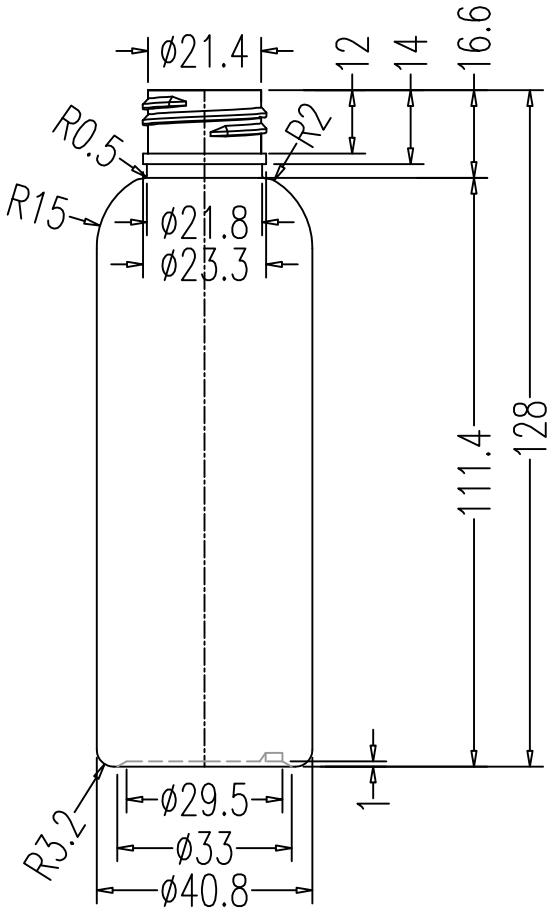

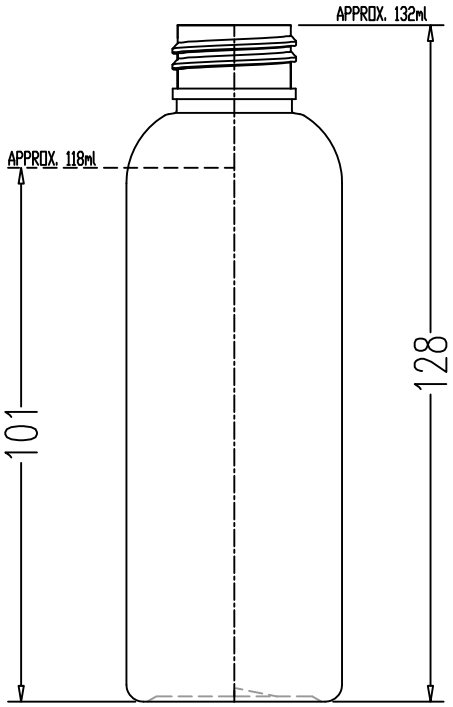

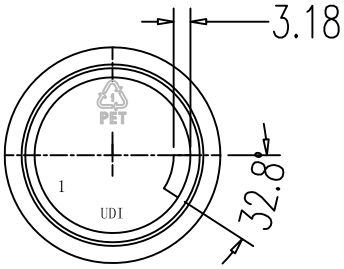

Noatnal Dimension (mm)	Tolerance (mm)							
<10	±0.10	Designer	Davis	Capacity	118ml /4 fl.oz bottle		Weight: 16g	
10<25	±0.15							
25<50	±0.40	Approve		Spec		Material	PET	Shrink ratio	0.5%
50<100	±0.60							
100<200	±1.00	Date	2020-04-10	Unit	mm	mfypack.1688.com		
200<	>1.50							