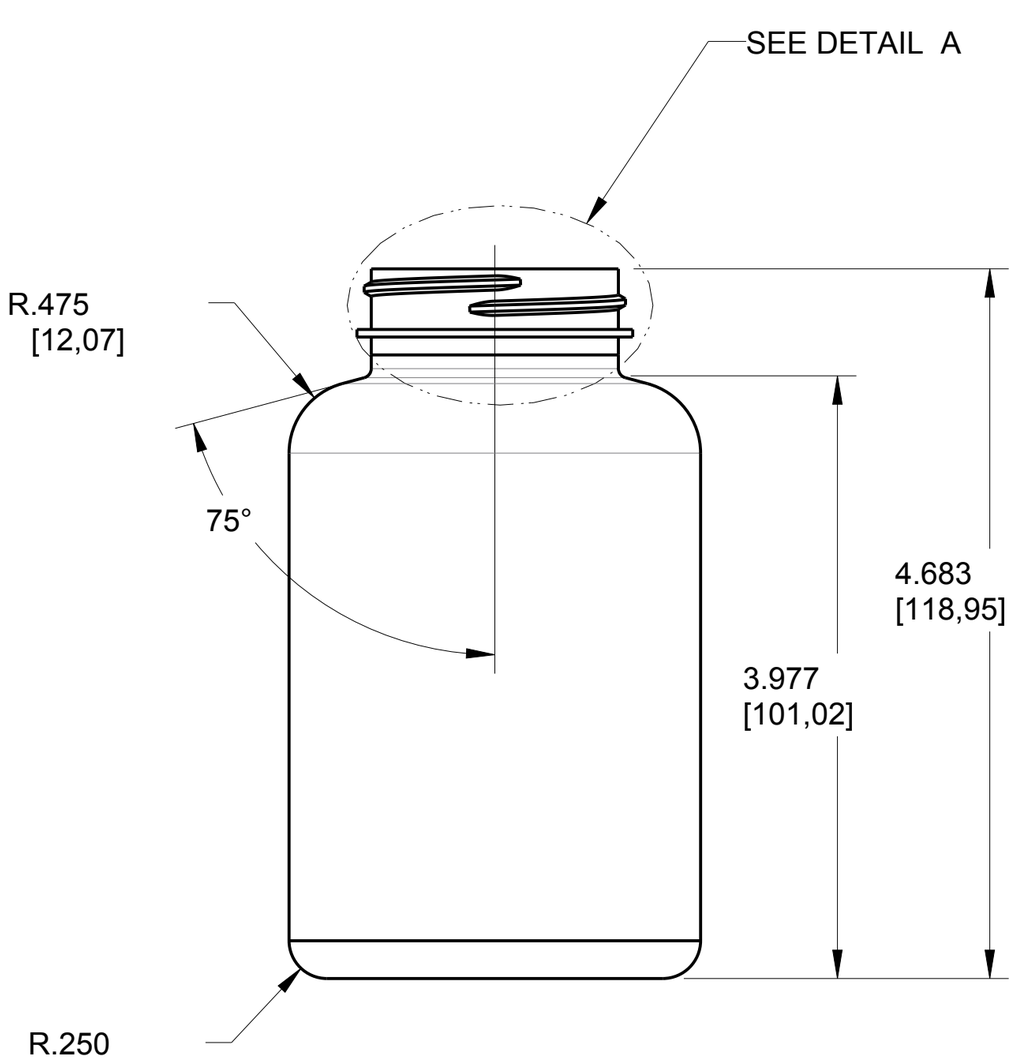

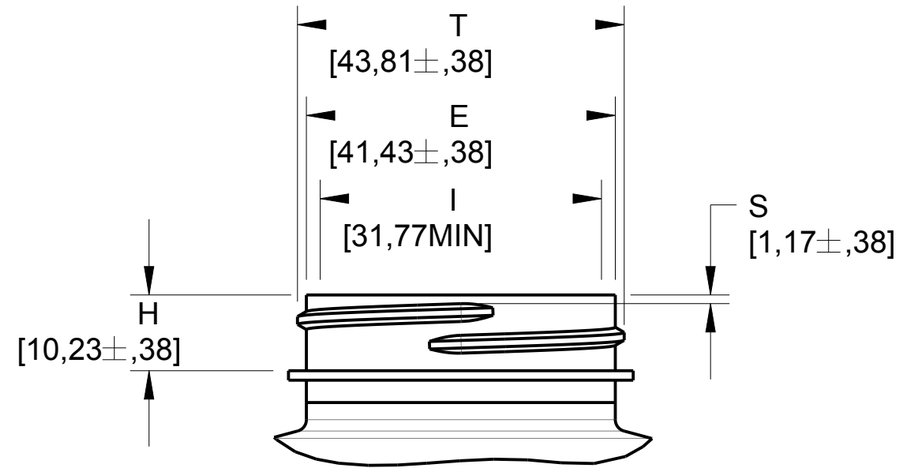

DETAIL A
SCALE 5/4

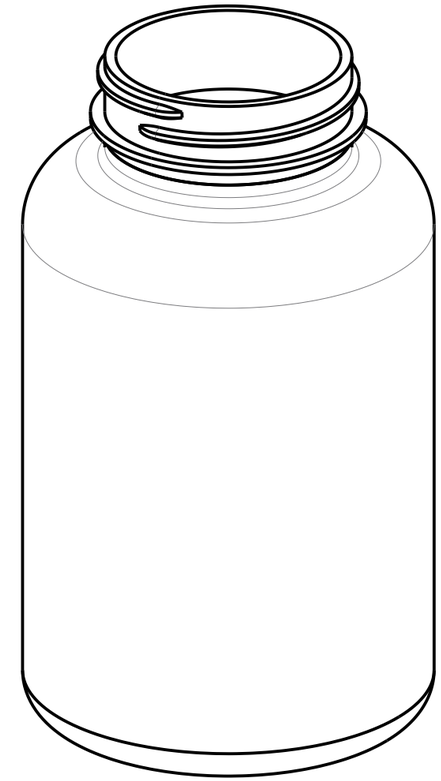

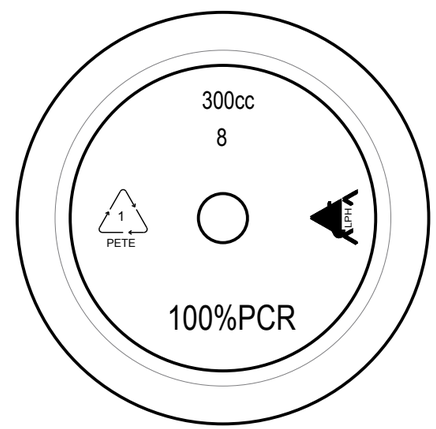

ALT BOTTOM PLUG CONFIG

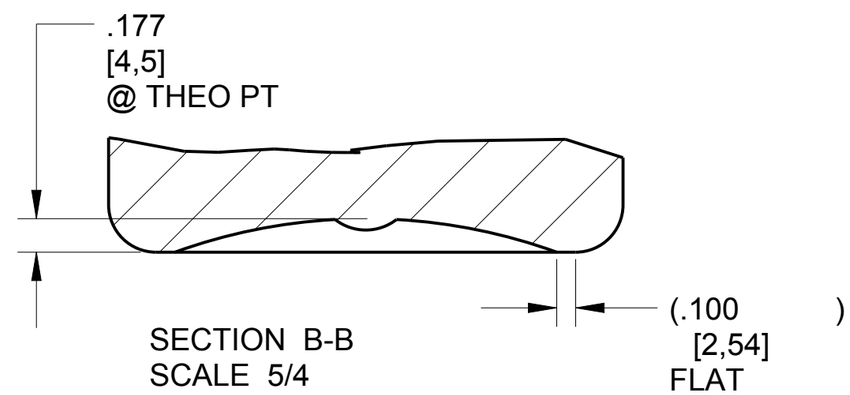

SECTION B-B
SCALE 5/4

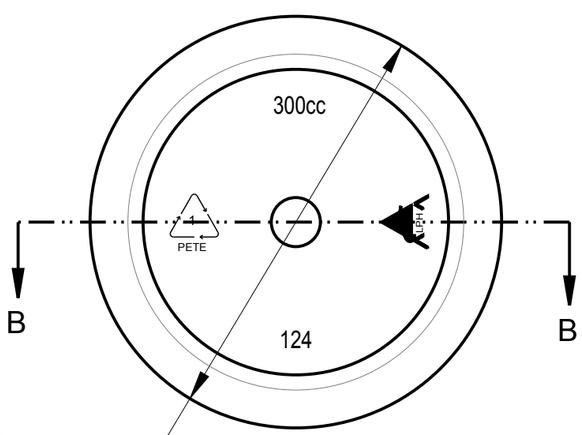

∅2.716±.060
[68,99±1,52]

Neck Finish: L45SP400		DISCLAIMER: Alpha Packaging assumes no responsibility for form, fit and function of closures, accessories, and/or shelf life and compatability of intended contents with this bottle.				
© Alpha Packaging,Inc.	Min Thk	Color	Weight	Std. Pack	Revisions	
All measurements are in inches, [Metric]	.012[,30]	All Colors	37 Gms± 3	210, Bulk 240, Stacked	K 33.5g Was 28g,02/06/13 RAB	
					L GmWt Tol was±1,11/13/13,sct	
					M Remove 33.5g option. 09-23-15 RAB	
Neck Dimensions: T = 1.725±.015 E = 1.631±.015 H = .403±.015 I = 1.251 MIN S = .046±.015					Tolerance: Where not shown Decimal ±0.05 [1,27] Angular ±1°	
		Overflow Capacity:	368 ml ± 9		Material: PET	

ALPH PACKAGING
Packaging, Inc.
(314) 427-4300--(800) 421-4772

Scale:	Drawn By:	Date:
1/1	SCT	07-25-00

300 CC, STRAIGHT SIDED, PET, 45-400 CT
300S45PET
DwgRev: M

Approved By: SJ
Drawing NO: 300PS1XX45L400