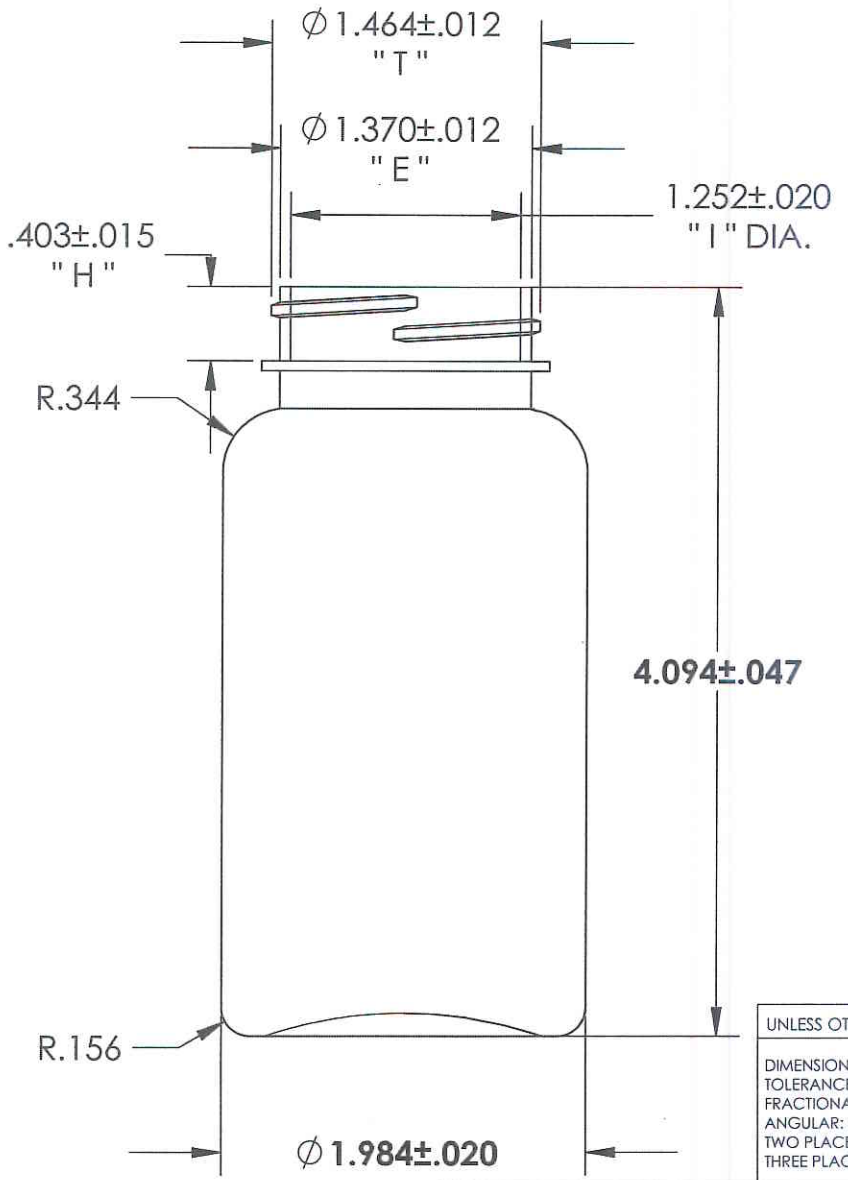

SPECIFICATION NECK FINISH 38SP400

KEY	MAX	MIN
T	1.476	1.452
E	1.382	1.358
H	0.418	0.398
S	0.061	0.031
I		1.240

UNLESS OTHERWISE SPECIFIED:

DIMENSIONS ARE IN INCHES
TOLERANCES:
FRACTIONAL ± 1/16
ANGULAR: MACH ± BEND ±
TWO PLACE DECIMAL ±.05
THREE PLACE DECIMAL ±.005

INTERPRET GEOMETRIC TOLERANCING PER:

MATERIAL: PET

FINISH: 38SP400

DO NOT SCALE DRAWING

	NAME	DATE
DRAWN	AS	6-26-07
CHECKED		6-26-07
ENG APPR.	AMIT SHAH	6-26-07
MFG APPR.		6-26-07
Q.A.		6-26-07

COMMENTS:
O'FLOW: 170.0±5.0cc
Weight: 22.50±2.0gms

PROPRIETARY AND CONFIDENTIAL

THE INFORMATION CONTAINED IN THIS DRAWING IS THE SOLE PROPERTY OF TIM PLASTICS, INC. ANY REPRODUCTION IN PART OR AS A WHOLE WITHOUT THE WRITTEN PERMISSION OF TIM PLASTICS,INC. IS PROHIBITED.

TIM PLASTICS, INC.

TITLE:
150cc ROUND BOTTLE-A (38SP400)

SIZE	DWG. NO.	REV
A	3001150	A

SCALE: 1:1 | WEIGHT: 22.50±2.0gms. | SHEET 1 OF 1

5 4 3 2 1