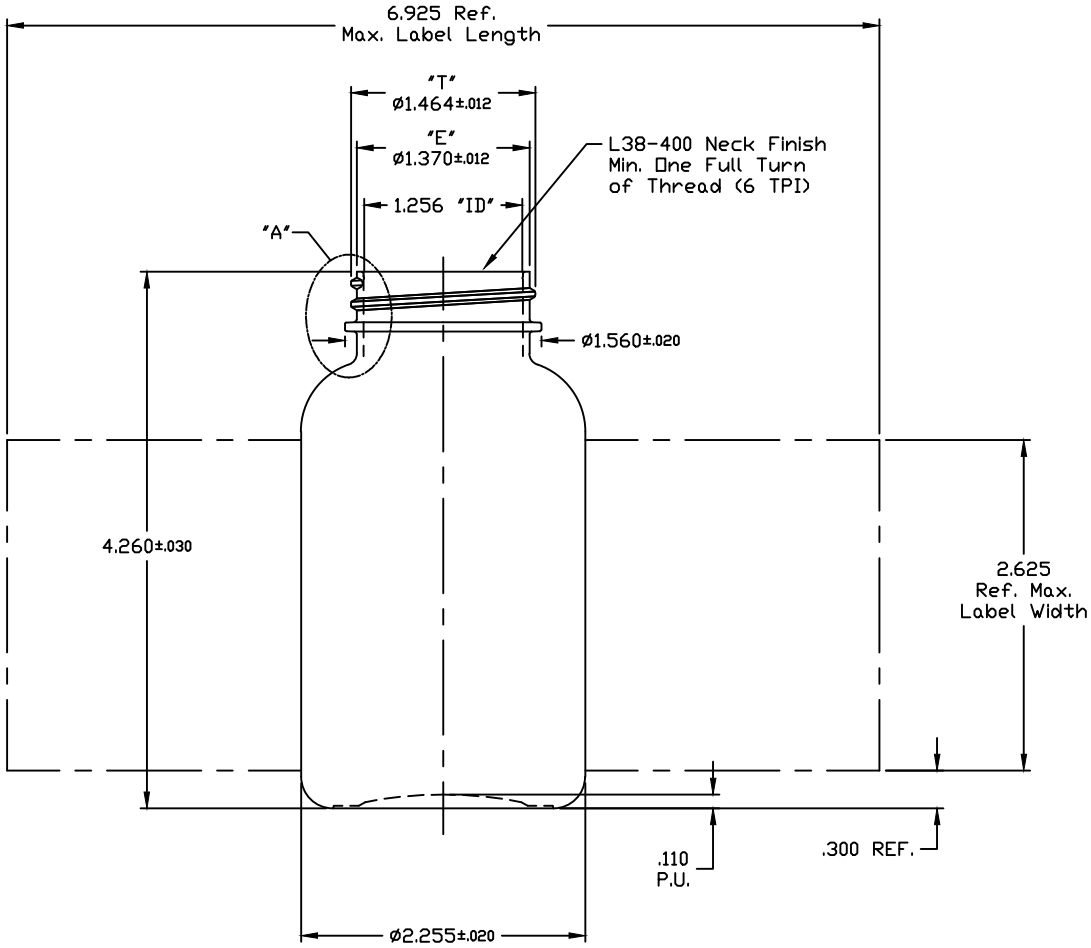

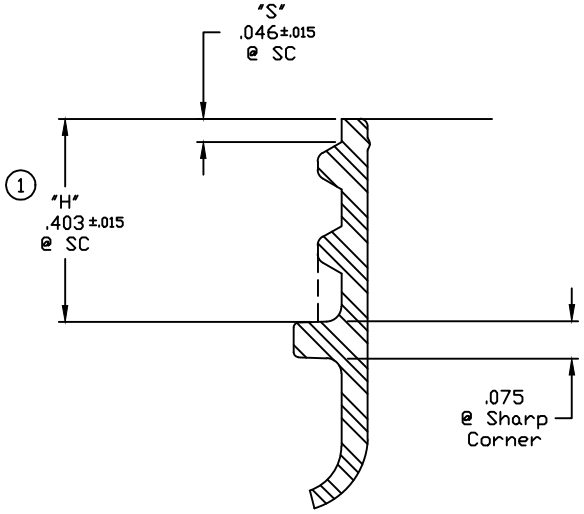

DETAIL "A"
scale 4:1

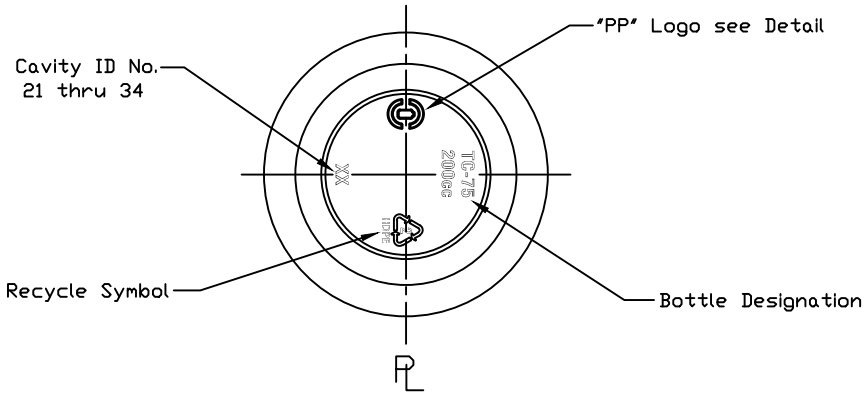

The information contained on this drawing is proprietary and confidential to Paradigm Packaging. The information is made available only with the understanding and agreement that no part of it shall be reproduced, copied or duplicated in any manner, or loaned, divulged or otherwise disclosed to others without express written consent.

REV.	DATE	DESCRIPTION	BY
1	09-23-14	ECN #1858 .403 "H" was .420	KD

Tolerances (except as noted)		
decimal	fractional	angular
± .035	± 3/64	± 1°

weight (gr)	overflow (cc)
18.0 ± 2.0	215.0 ± 6

material: HDPE | scale FULL

min. wall thickness : .022

PARADIGM Packaging
141 North 5th Street
Saddle Brook, NJ 07663
TELEPHONE: (201) 507-0900 * FAX: (201) 291-3840
Setting the Standard in Rigid Plastic Packaging

TC-75 (200cc) Bottle
with 38mm CT Neck & Large Transfer Bead

drawn by: KD	date: 8/7/14	rev.	drawing no
app'd by:	date:	1	B-7679