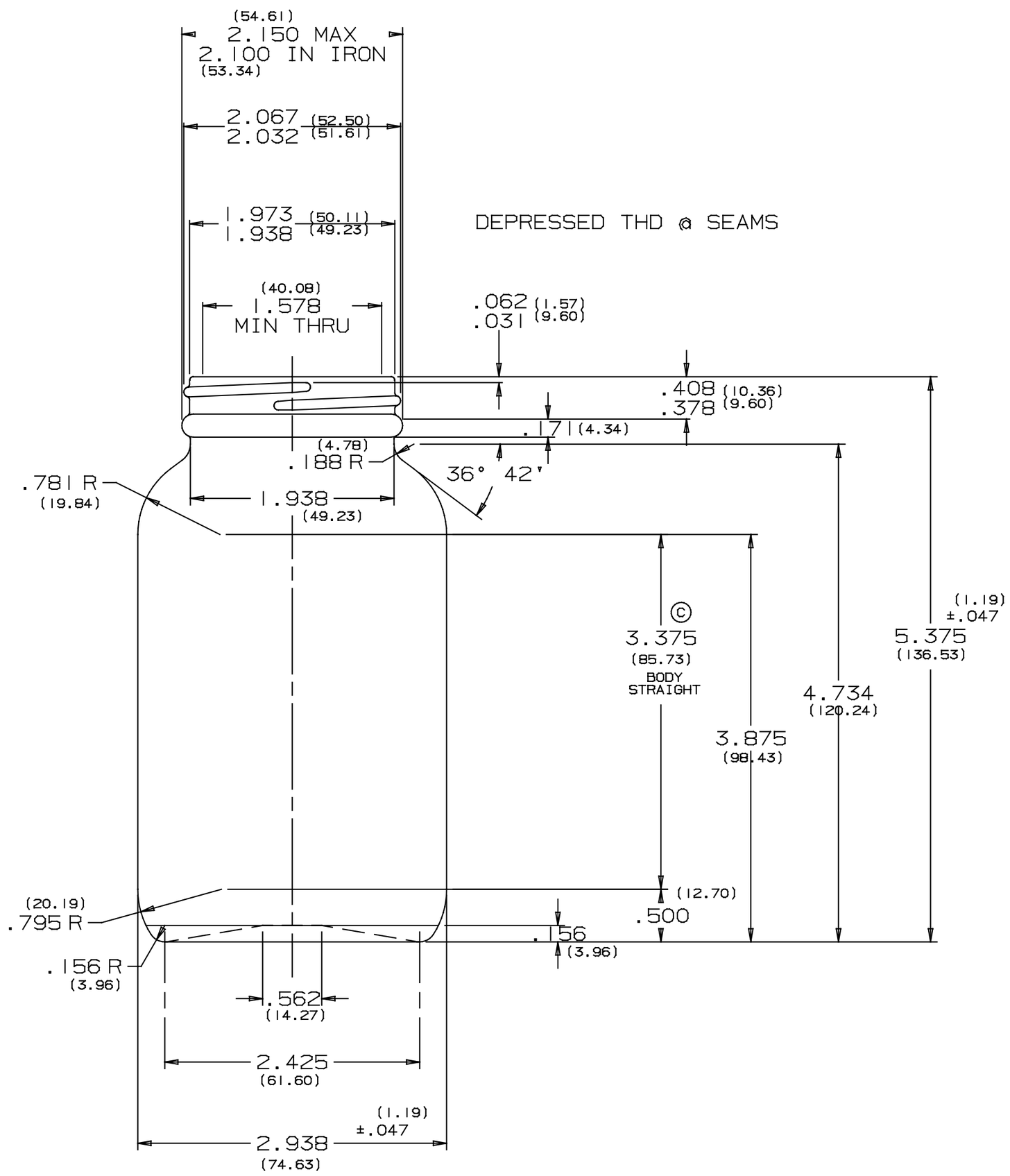

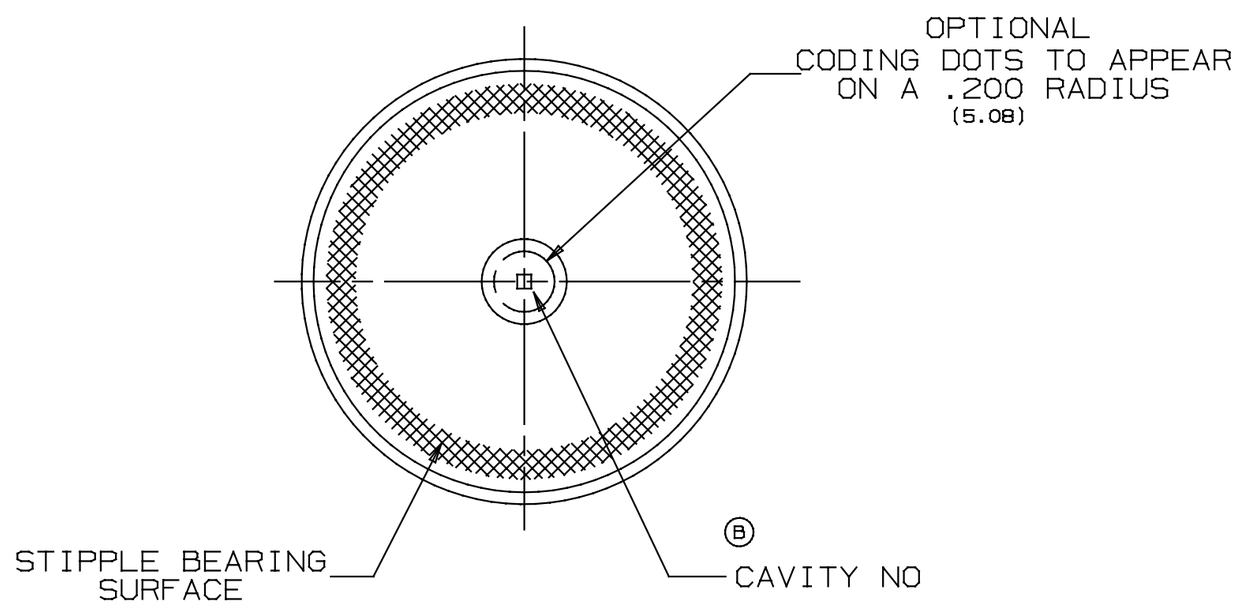

(C) ADD MILLIMETERS AND BODY STRT. 1/30/07
(B) CAV. # WAS OFF CENTER 8/5/98
(A) CAP WAS 439.91cc±6.47cc WGT WAS 7.75oz; REV'D AFTER SAMPLING 4/3/96

REVISIONS

DRAWING NO: C- 37442C

DATE DRAWN 1-17-96
DRAWN BY E. CHANCE
CHECKED BY

MOLD REGISTER NO. L-769R
SCALE FULL UNLESS OTHERWISE SPECIFIED
APPROX. WGT. 7.62oz

PIRAMAL GLASS
knowledge action care
MARLTON, NJ USA

216 GRAMS AMBER

CUSTOMER
TITLE WIDE MOUTH PACKER
PRACTICAL FILL 400ml
CAPACITY 437.0cc ± 7.0cc OF (A)
FINISH GPI 400-53mm-405