FPT300F

Homopolymer Polypropylene

- Good Mold Release, Excellent Part Finish (Low Bloom)
- Suggested Uses Include Housewares, Caps and Closures, Mugs / Cups, Thin-Walled Containers

Property	Units	Typical Value	Test Method
Nominal Melt Flow Rate (230°C/2.16kg)	g/10 min	30	ASTM D1238
Tensile Strength at Yield (2 in/min, 50 mm/min)	psi MPa	4,800 33	ASTM D638
Elongation at Yield (2 in/min, 50 mm/min)	%	10	ASTM D638
Flexural Modulus (0.05 in/min, 1.3 mm/min, 1% secant)	psi MPa	200,000 1,379	ASTM D790A
Notched Izod Impact Strength at 23°C	ft-lbs/in J/m	0.7 37	ASTM D256A
Rockwell Hardness	R	104	ASTM D785

For cautions and other information relating to handling of

and exposure to this product, please see material safety data sheet code number C4001 published by Braskem.

550 Technology Drive

Pittsburgh, PA 15219
1-800-223-8871

Revision Date: Monday, March 23, 2009

www.braskem.com

MOLD-RITE PLASTICS, LLC
1 PLANT STREET, P.O. BOX 160
PLATTSBURGH, NY 12901
(518) 561-1812
http://moldriteplastics.com

Product Data Sheet

CP0001 Grade

Polypropylene, Impact Copolymer

Product Description

CP0001 is a high flow, high impact polypropylene copolymer grade resin designed for molding applications requiring good balance stiffness, impact resistance and process ability. This grade specification designated by Mold-Rite Plastics covers all copolymer resins that meet the typical value data listed below.

Regulatory Compliance

FDA-21 CFR 177.1520(c) 3.1 for Food & Drug Contact
RoHS Compliant
CONEG/Heavy Metal Compliant
Proposition 65 Compliant
EU Directive 2002/72/EC Compliant

Typical Properties	Method	Typical Value	Unit
Physical			
Density – Specific Gravity	ASTM D 792	.900 - .905	sp gr. 23/23º C
Melt Flow Rate	ASTM D 1238	35.0	g/10 min
Mechanical			
Tensil Strength @ Yield (2 in/min) (50 mm/min)	ASTM D 638	 3,100 – 4,000 21.4 – 27	 PSI MPa
Flexural Modulus (0.05 in/min, 1% Secant, Procedure A) (1 mm/min, 1% Secant, Procedure A)	ASTM D 790	 160,000 – 210,000 1,103 – 1,450	 PSI MPa
Impact			
Notched Izod impact (23 ºC, Method A)	ASTM D 256	 1.4 – 2.4 75 – 128	 Ft-lb/in J/m
Thermal			
Heat Deflection (Softening Point) Unannealed DTLU @ 66psi	ASTM D 648	 212 – 225 88 – 107	 ºF ºC
Processing Range	-----	400 – 500	ºF

For further regulatory information contact Mold-Rite Plastics customer service or sales department.

Notes: These are typical properties not to be construed as specifications. Mold-Rite Plastics reserves that right to include any other resin grade that meets that above data values and regulatory requirements.

This product data sheet covers multiple resin formulations and include any other resin grade that meets the above typical data values and regulatory requirements. All listed grades have similar physical, chemical and processing properties. Listed known grades; 44FY01; SG802N; AP5135H; 4820WZ; 6535A; 2535A

Revision Date: 07/15/2014

	Raw Material Product Data Sheet	
MRP MOLD-RITE PLASTICS Innovative • Reliable • Responsive	**Product Name:** MRPBK01	**Revision #: A**
	Revision Date	August 14, 2019
	Effective Date	October 14, 2019

Product Name:

MRPBK01

Product Description:

FDA Compliant black colorant intended to be used with injection-molded plastic resin

Product Data:

Additives None

Typical Properties	Typical Value
Delta E Tolerance	Less than 2.00
Visual Evaluation	Visual match to approved color standard

FDA Compliance/Status

FDA, Title 21 CFR Food & Drug Contact	☒ Compliant	☐ Not

This colorant formulation has been manufactured using FDA approved ingredients and, when used appropriately (with an FDA approved resin), will meet FDA contact applications regulated under the provisions of the Food, Drug, and Cosmetic Act (and subsequent amendments as outlined in Title 21 of the Code of Federal Regulation.

Additional Compliance/Status (and amendments as of the date of this document)

Proposition 65, Safe Drinking Water and Toxic Enforcement Act	☒ Compliant	☐ Not
CONEG, Model Toxics in Packaging Legislation	☒ Compliant	☐ Not
EU 2015/863, as regards the list of restricted substances, RoHS	☒ Compliant	☐ Not

For further regulatory information, please contact Mold Rite Plastic's customer service or sales department.

This product data sheet addresses all colorants that meet the above requirements & specifications. Data was obtained from supplier product data sheets (where applicable). This data is intended to be used as a guide only. It is ultimately the customer's responsibility to determine the suitability of the material for their specific application, and to be responsible for assuring compliance with all applicable laws and regulations.

Product Data Sheet

MRP Description:(A01)MRPLN04.020 FOAM R SFYP

MRPLN04 – Universal Heat Seal Foam Liner

Product Description

This product is a 1 piece universal heat seal consisting of foam backing, paper, aluminum foil and heat seal layer..
This specification, designated by Mold-Rite Plastics, covers all liners that meet the typical value data listed below;

- Polystyrene Foam
- Paper
- Aluminum Foil
- Heat Seal Coating

Regulatory Compliance

FDA Title 21 CFR Section 177.1210 (Closure with Sealing Gaskets for Food Containers,
RoHS Compliant
CONEG/Heavy Metal Compliant
Proposition 65 Compliant

Typical Properties	Typical Value
Overall Thickness	.024 +/- 10%
Drug Master File	16574
Printed	R SFYP
Oxygen Transmission	Essentially Zero
Water Vapor Transmission	Essentially Zero

For further regulatory information, contact Mold-Rite Plastics customer service or sales department.

Notes: These are typical properties not to be construed as specifications. Mold-Rite Plastics reserves that right to include any other liner that meets that above data values and regulatory requirements.
This product data sheet covers multiple liners that meet the above typical data values and regulatory requirements. All listed liners have similar physical, chemical and processing properties. Listed known liners: HS035, HS 035N, HS205, FS5-8, HSS-5.6

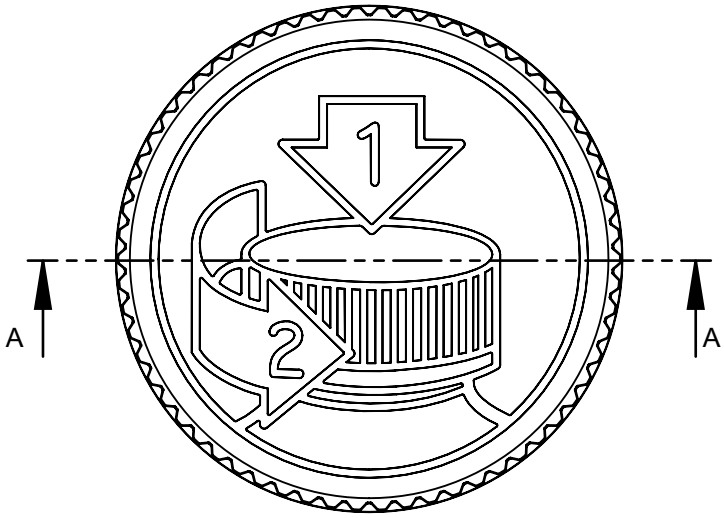

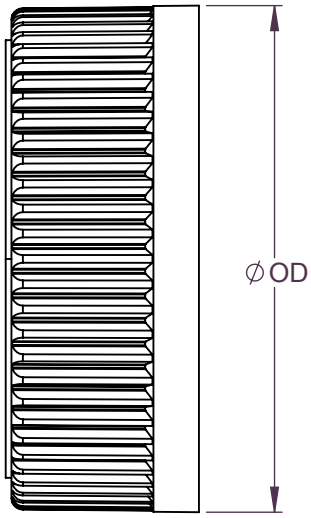

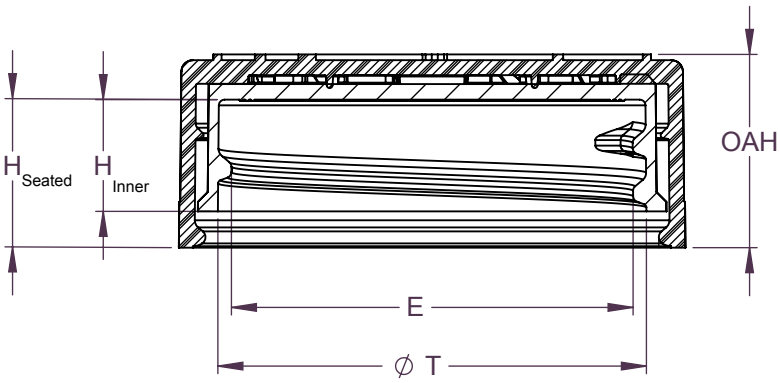

SECTION A-A
SCALE 3 : 2

.167 PITCH - 6 THREADS PER INCH
380° FULL DEPTH THREAD

REFERENCE	TOLERANCE	DIMENSION	UNITS
E	±0.010 [0.25]	1.396 [35.46]	in [mm]
T	±0.010 [0.25]	1.488 [37.80]	in [mm]
H (Seated)	REFERENCE	0.521 [13.23]	in [mm]
H (Inner)	±0.008 [0.20]	0.388 [9.86]	in [mm]
OD	±0.013 [0.33]	1.760 [44.70]	in [mm]
OAH	±0.011 [0.28]	0.671 [17.04]	in [mm]
PART WEIGHT	± 0.7	7.1	g

STATIC TORQUE RECOMMENDATION
17-26 in-lbs
THIS REQUIREMENT MAY VARY DEPENDING UPON BOTTLE MATERIAL, NECK FINISH, AND CAPPING EQUIPMENT

THE CLOSURE DIMENSIONS DEPICTED ARE THOSE WHICH HAVE GENERALLY BEEN FOUND TO BE FUNCTIONAL BASED ON INDUSTRY EXPERIENCE BECAUSE OF VARIABILITY IN GLASS AND PLASTIC CONTAINER FINISHES, EACH CLOSURE/FINISH SYSTEM SHOULD BE INDIVIDUALLY EVALUATED AND TESTED TO ENSURE IT MEETS APPLICABLE PERFORMANCE CRITERIA. SEE QUALITY ASSURANCE SPECIFICATIONS FOR ADDITIONAL INFORMATION.

MOLD-RITE, WEATHERCHEM AND STULL TECHNOLOGIES RESERVES THE RIGHT TO REVISE ANY OR ALL SPECIFICATIONS AND REQUIREMENTS.

DRAWING TYPE : CUSTOMER

REPLACES DRAWINGS:
C-8019

DIMENSIONS ENCLOSED IN ( ) INDICATE REFERENCE DIMENSIONS AND NO TOLERANCE LIMITS ARE ESTABLISHED

TOLERANCES UNLESS OTHERWISE SPECIFIED

DIMENSION (inches)	TOLERANCE	DIMENSION (mm)	TOLERANCE
0-0.787	±0.006	0-20	±0.152
0.788-1.181	±0.008	21-30	±0.203
1.182-2.756	±0.012	31-70	±0.305
2.757-3.937	±0.016	71-100	±0.406
3.938-5.096	±0.020	101-150	±0.508
5.097-7.874	±0.024	151-200	±0.610
7.875-9.843	±0.032	201-250	±0.813

ANGULAR TOLERANCE ± 2°

PROPRIETARY AND CONFIDENTIAL

MRP MOLD-RITE PLASTICS®
Innovative • Reliable • Responsive

THIRD ANGLE PROJECTION

SOLIDWORKS

DISTRIBUTION CODE: D

DRAWING NAME: 38-400 CRC PDT ASSM
PICTO

DRAWING NUMBER: CQA - 10023

MATERIAL: POLYPROPYLENE

MODEL NUMBER: PM-10161 38-400 CRC ASSM

DRAWN BY.	BDG	4/29/2016
ENG APPR.	BDG	2/1/2017
QA APPR.	ACP	02/01/2017

SCALE	SHEET SIZE	SHEET	REV.NP
1:1	11in*8.5in	1 of 3	04.AD

DATE	REV	N/P	DESCRIPTION	ENG	DRWN
01/30/17	04	AD	DRAWING FORMAT UPDATED. ADDED H(SEATED) AS REFERENCE DIMENSION	BDG	BDG

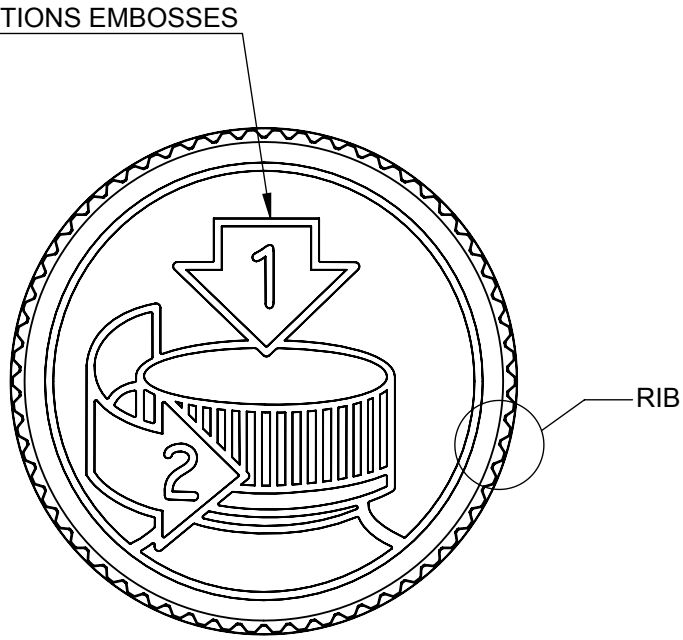

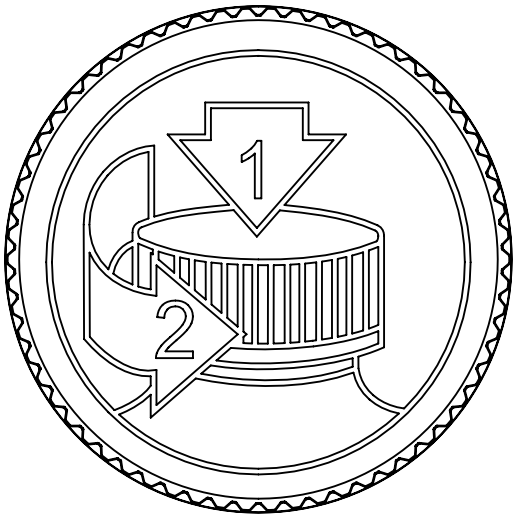

ALTERNATE PICTO
INSTUCTIONS
(SIDE GATED MOLD)

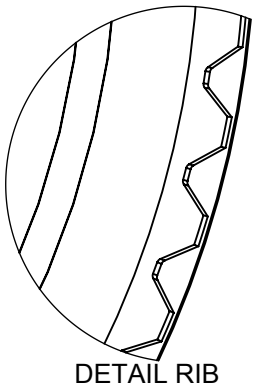

DETAIL RIB
SCALE 6 : 1

(62) EQUISPACED RIBS

THE CLOSURE DIMENSIONS DEPICTED ARE THOSE WHICH HAVE GENERALLY BEEN FOUND TO BE FUNCTIONAL BASED ON INDUSTRY EXPERIENCE BECAUSE OF VARIABILITY IN GLASS AND PLASTIC CONTAINER FINISHES, EACH CLOSURE/FINISH SYSTEM SHOULD BE INDIVIDUALLY EVALUATED AND TESTED TO ENSURE IT MEETS APPLICABLE PERFORMANCE CRITERIA. SEE QUALITY ASSURANCE SPECIFICATIONS FOR ADDITIONAL INFORMATION.

MOLD-RITE, WEATHERCHEM AND STULL TECHNOLOGIES RESERVES THE RIGHT TO REVISE ANY OR ALL SPECIFICATIONS AND REQUIREMENTS.

DRAWING TYPE : CUSTOMER

REFERENCES:

DIMENSIONS ENCLOSED IN ( ) INDICATE REFERENCE DIMENSIONS AND NO TOLERANCE LIMITS ARE ESTABLISHED

TOLERANCES UNLESS OTHERWISE SPECIFIED

DIMENSION (inches)	TOLERANCE	DIMENSION (mm)	TOLERANCE
0-0.787	±0.006	0-20	±0.152
0.788-1.181	±0.008	21-30	±0.203
1.182-2.756	±0.012	31-70	±0.305
2.757-3.937	±0.016	71-100	±0.406
3.938-5.096	±0.020	101-150	±0.508
5.097-7.874	±0.024	151-200	±0.610
7.875-9.843	±0.032	201-250	±0.813

ANGULAR TOLERANCE ± 2°

MRP MOLD-RITE PLASTICS®
Innovative • Reliable • Responsive

THIRD ANGLE PROJECTION

SOLIDWORKS

DISTRIBUTION CODE: D

DRAWING NAME: 38-400 CRC PDT ASSM PICTO

DRAWING NUMBER: CQA - 10023

DRAWN BY.	BDG	4/29/2016
ENG APPR.	BDG	2/1/2017
QA APPR.	ACP	02/01/2017

MATERIAL: POLYPROPYLENE

MODEL NUMBER: PM-10161 38-400 CRC ASSM

SCALE	SHEET SIZE	SHEET	REV.NP
1:1	8 .5 X 11	2 of 3	04.AD

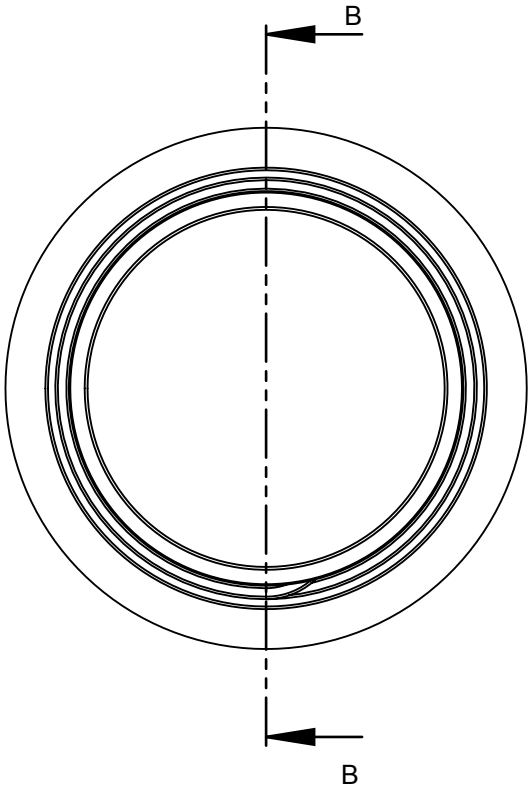

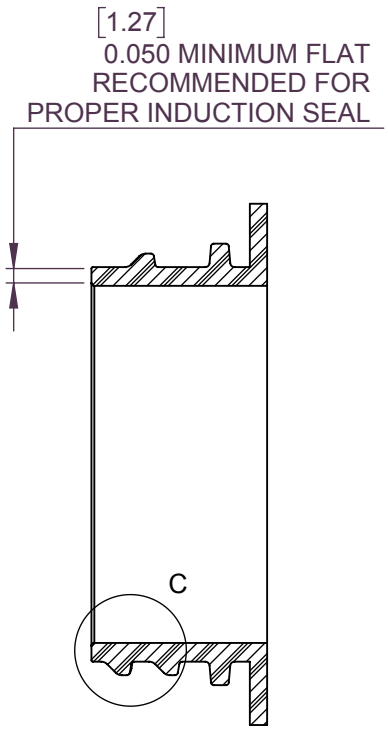

SECTION B-B
SCALE 3 : 2

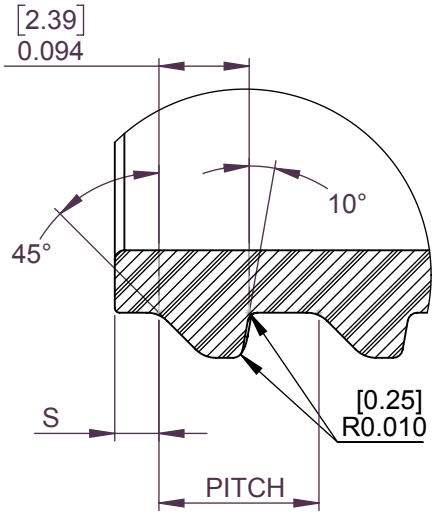

DETAIL C
SCALE 5 : 1

THREAD DETAIL

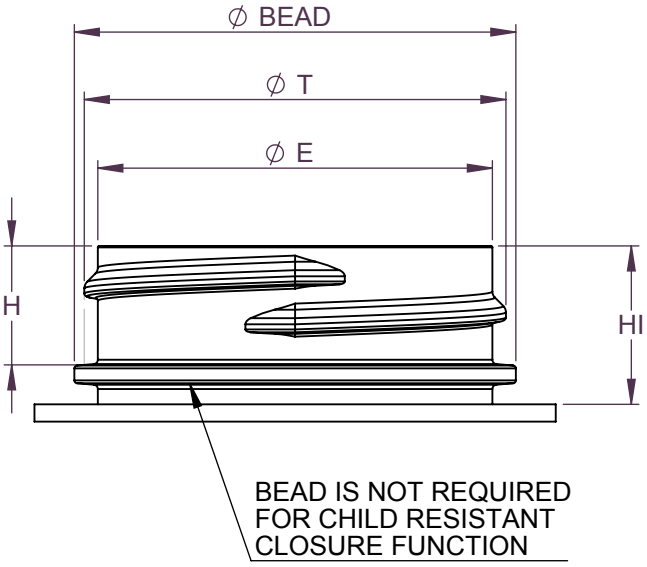

REFERENCE	TOLERANCE	UNITS	DIMENSIONS
E	±0.012 [0.30]	in [mm]	1.370 [34.80]
T	±0.012 [0.30]	in [mm]	1.464 [37.19]
I	MINIMUM	in [mm]	1.225 [31.11]
S	±0.015 [0.38]	in [mm]	0.046 [1.17]
H	MIMIMUM	in [mm]	0.403 [10.24]
H1	MINIMUM	in [mm]	.550 [13.97]
BEAD	MAXIMUM	in [mm]	1.545 [39.24]
TPI			6
PITCH		in	0.167 [4.24]

THE CLOSURE DIMENSIONS DEPICTED ARE THOSE WHICH HAVE GENERALLY BEEN FOUND TO BE FUNCTIONAL BASED ON INDUSTRY EXPERIENCE BECAUSE OF VARIABILITY IN GLASS AND PLASTIC CONTAINER FINISHES, EACH CLOSURE/FINISH SYSTEM SHOULD BE INDIVIDUALLY EVALUATED AND TESTED TO ENSURE IT MEETS APPLICABLE PERFORMANCE CRITERIA. SEE QUALITY ASSURANCE SPECIFICATIONS FOR ADDITIONAL INFORMATION.

MOLD-RITE, WEATHERCHEM AND STULL TECHNOLOGIES RESERVES THE RIGHT TO REVISE ANY OR ALL SPECIFICATIONS AND REQUIREMENTS.

DRAWING TYPE : CUSTOMER

DIMENSIONS ENCLOSED IN ( ) INDICATE REFERENCE DIMENSIONS AND NO TOLERANCE LIMITS ARE ESTABLISHED

TOLERANCES UNLESS OTHERWISE SPECIFIED

DIMENSION (inches)	TOLERANCE	DIMENSION (mm)	TOLERANCE
0-0.787	±0.006	0-20	±0.152
0.788-1.181	±0.008	21-30	±0.203
1.182-2.756	±0.012	31-70	±0.305
2.757-3.937	±0.016	71-100	±0.406
3.938-5.096	±0.020	101-150	±0.508
5.097-7.874	±0.024	151-200	±0.610
7.875-9.843	±0.032	201-250	±0.813

ANGULAR TOLERANCE ± 2°

PROPRIETARY AND CONFIDENTIAL

MRP MOLD-RITE PLASTICS®
Innovative • Reliable • Responsive

THIRD ANGLE PROJECTION

SOLIDWORKS

DISTRIBUTION CODE: D

DRAWING NAME: 38-400 CRC PDT ASSM RECOMMENDED NECK FINISH

DRAWING NUMBER: CQA - 10023

DRAWN BY.	BDG	4/29/2016
ENG APPR.	BDG	2/1/2017
QA APPR.	ACP	02/01/2017

MATERIAL

MODEL NUMBER:

SCALE	SHEET SIZE	SHEET	REV.N/P
1:1 1:1 & NOTES	8.5 X 11	3 of 3	04.AD