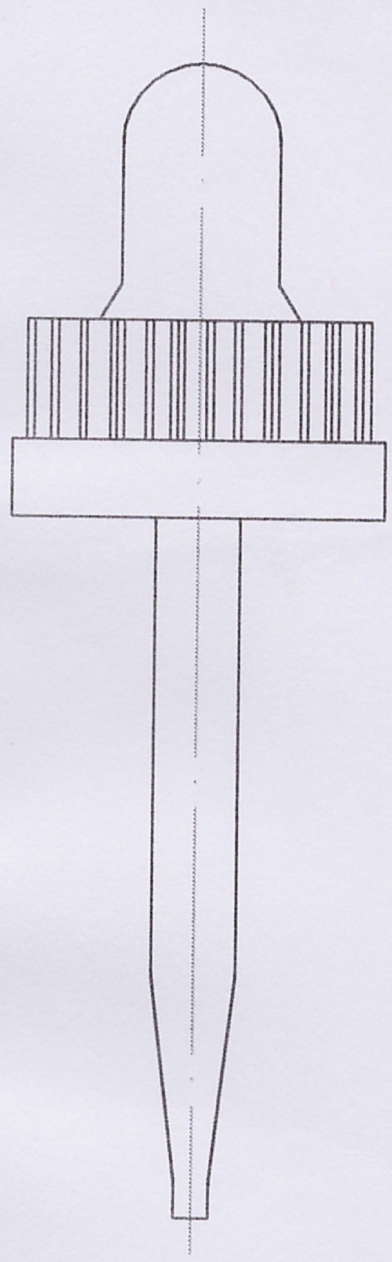

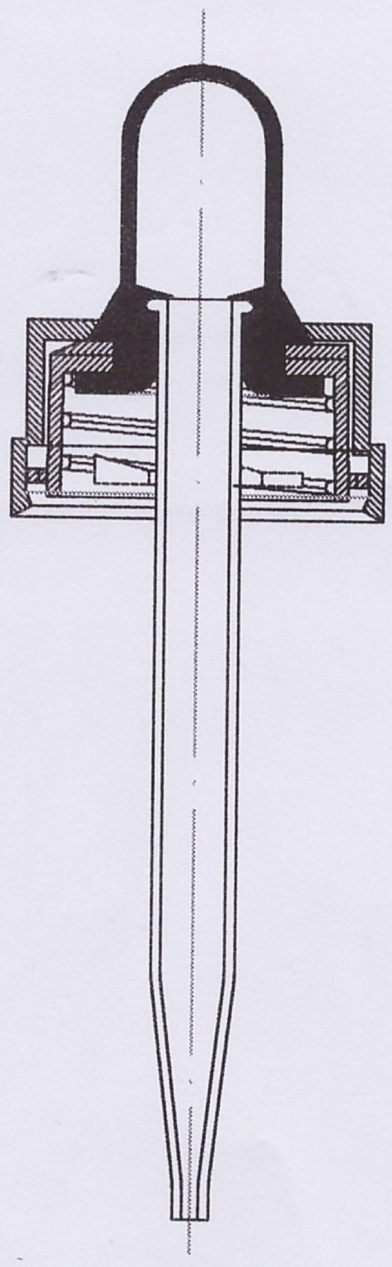

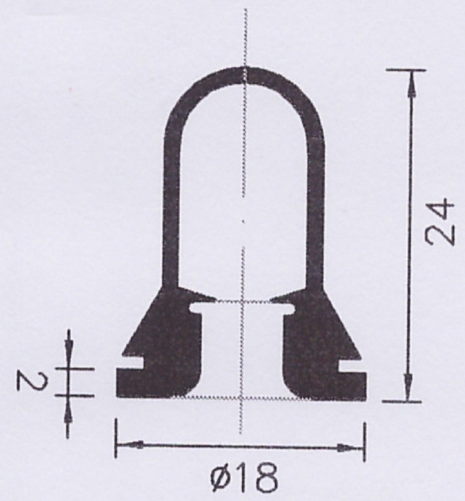

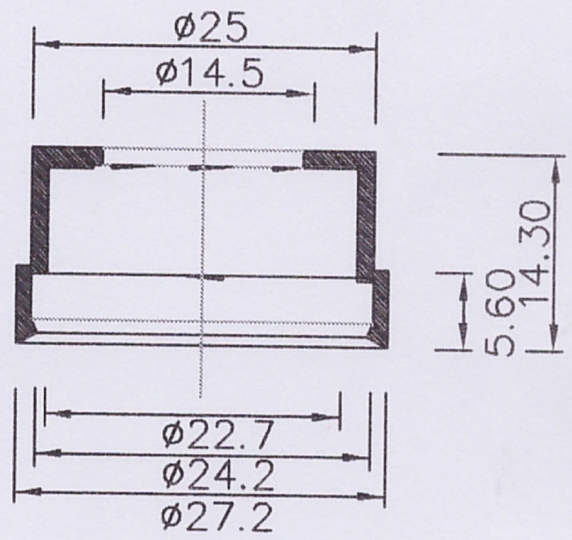

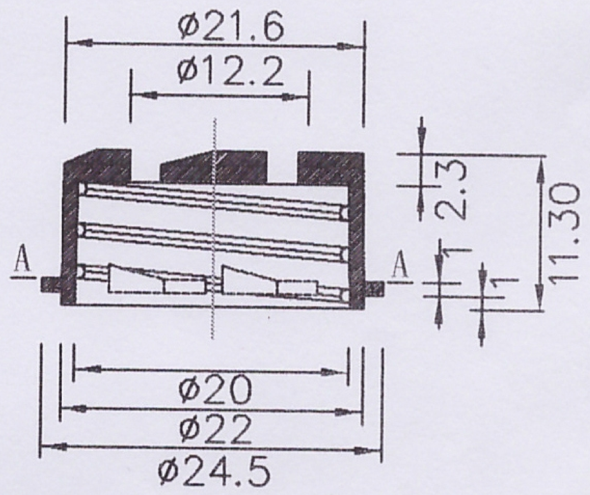

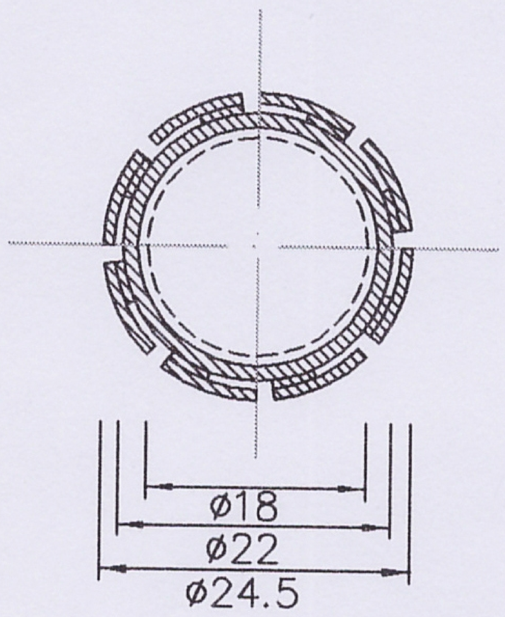

Tube length(l)	
Capacity	Length
5ML	48mm
10ML	58mm
15ML	65mm
20ML	70mm
30ML	77mm
50ML	89mm
100ML	109mm

10Z
7*75mm
20-400

Herede