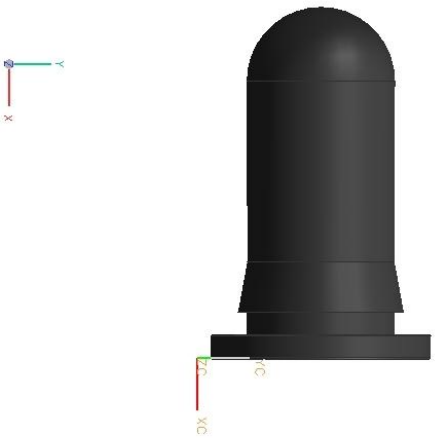

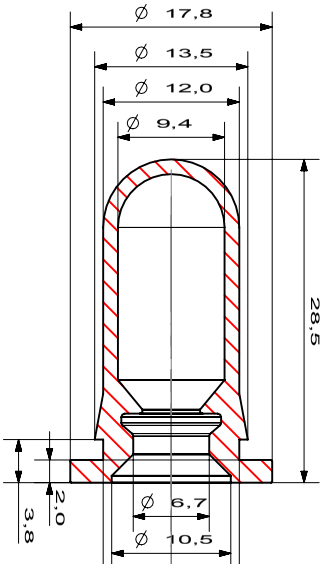
Ø 17,8
Ø 13,5
Ø 12,0
Ø 9,4
28,5
2,0
3,8
Ø 6,7
Ø 10,5

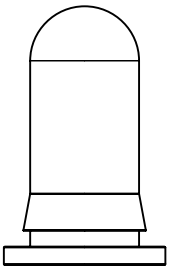

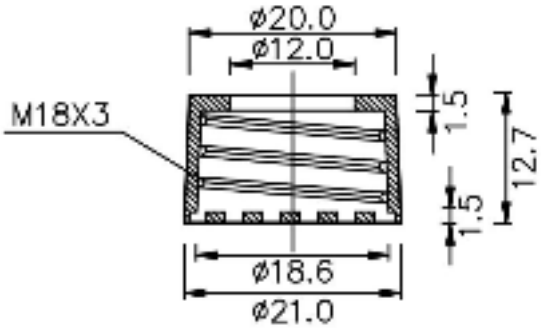
ø20.0
ø12.0
M18X3
1.5
12.7
1.5
ø18.6
ø21.0

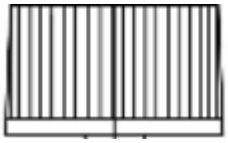

1ML
.75ML
.50ML
.25ML

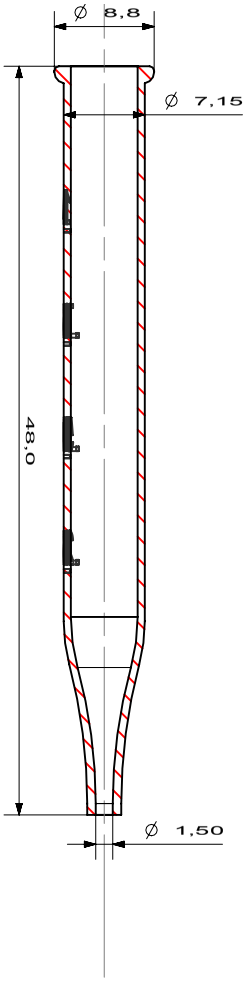
Ø 8,8
Ø 7,15
48,0
Ø 1,50

1ML
.75ML
.50ML
.25ML