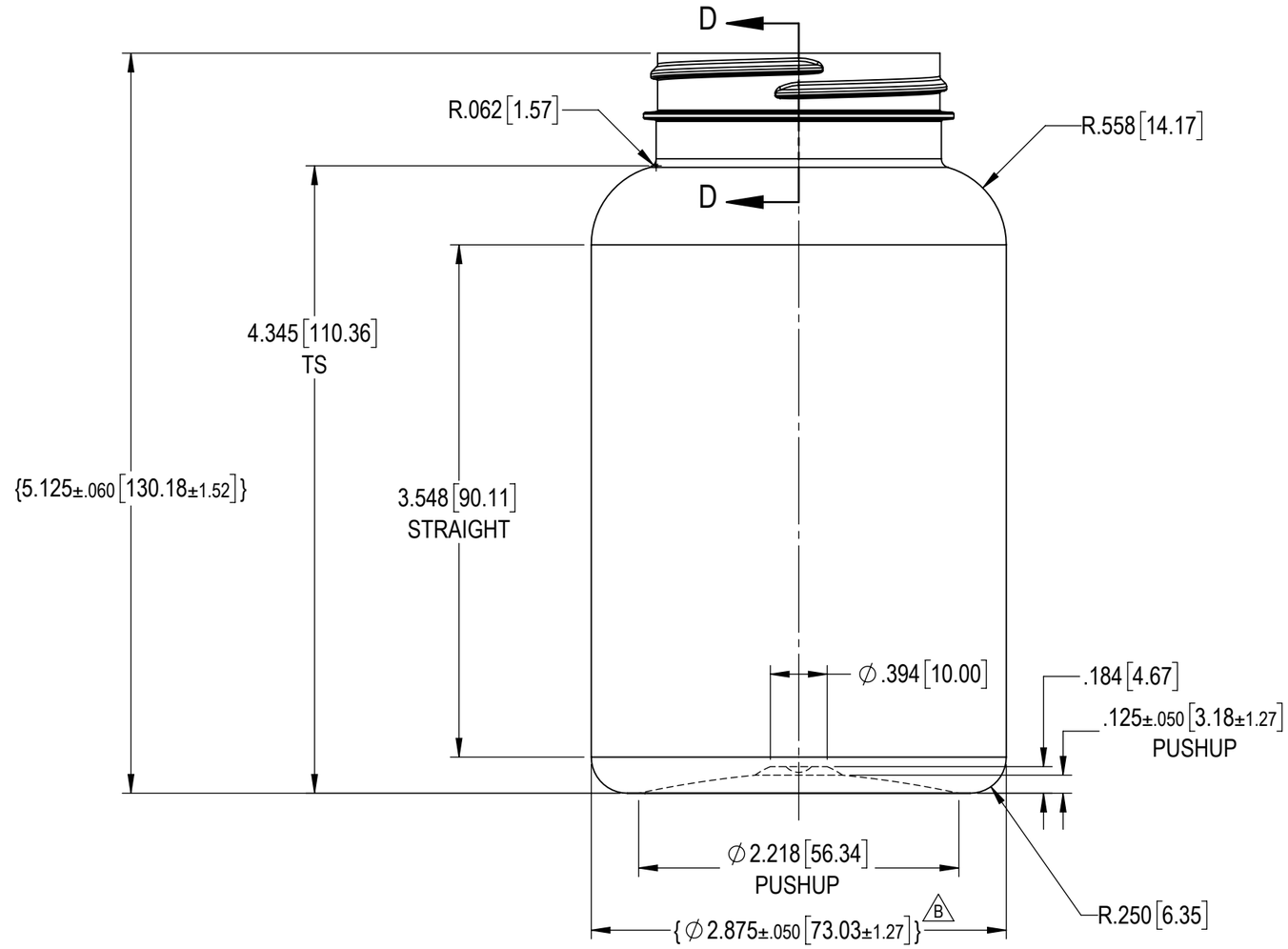

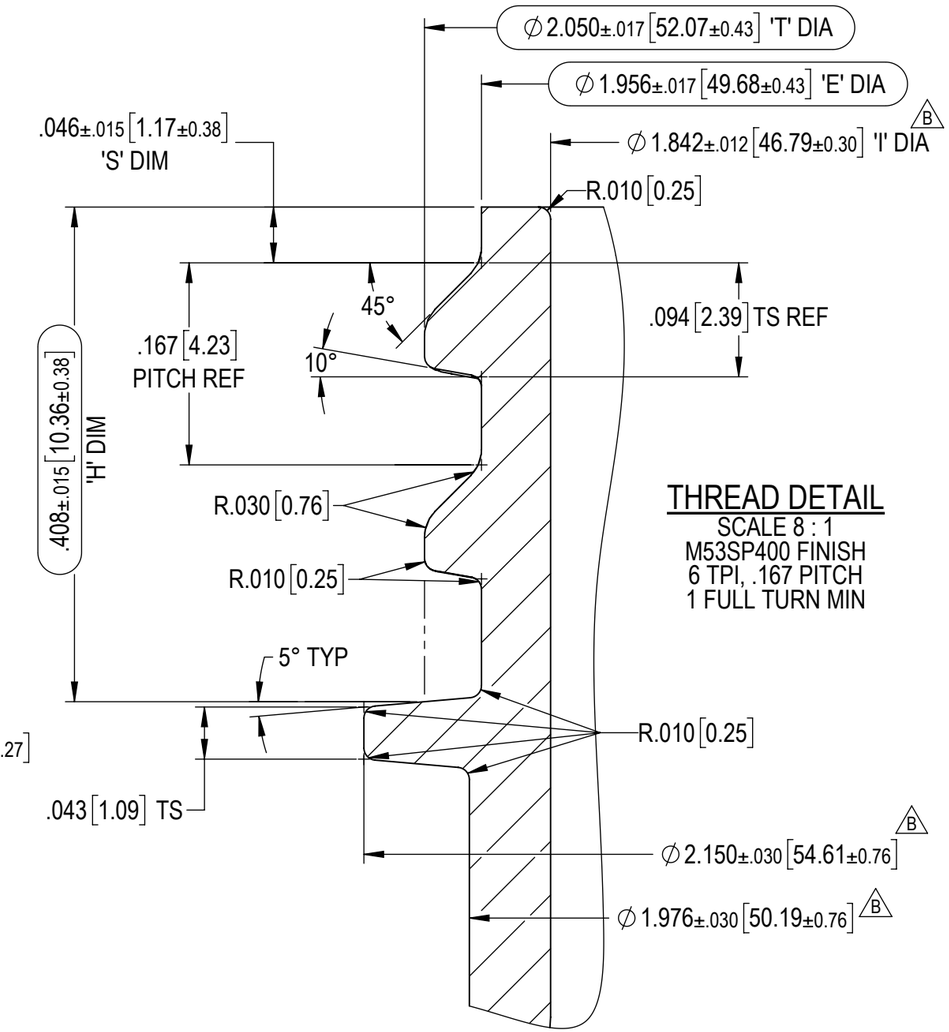

THREAD DETAIL

SCALE 8 : 1
M53SP400 FINISH
6 TPI, .167 PITCH
1 FULL TURN MIN

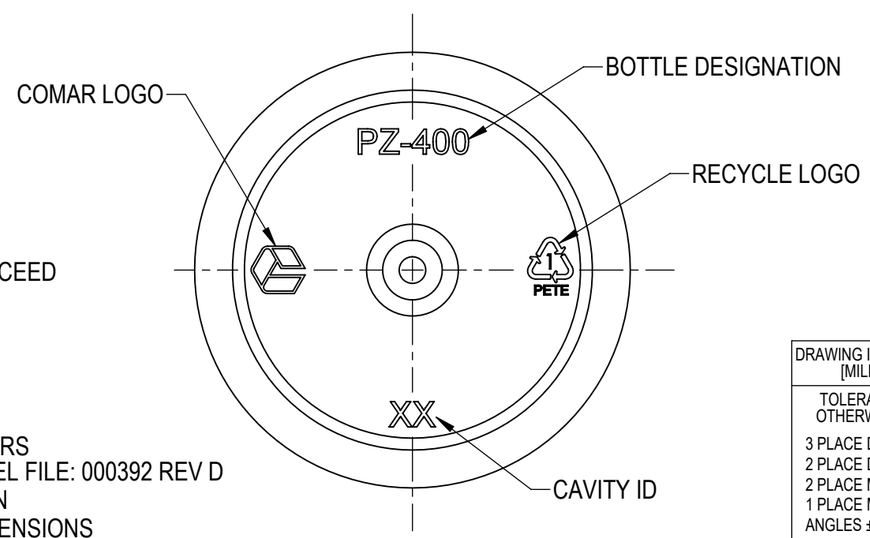

NOTES:

1. MATERIAL: PET
2. GRAM WEIGHT: {35.0 GRAMS ± 1.5 GRAMS} A B
3. CAPACITY: 461mL ± 11 mL TO OVERFLOW A B
4. WALL THICKNESS VARIATION IN LABEL PANEL NOT TO EXCEED .010" [0.25], VERTICALLY OR RADIALLY
5. MAX TAPER = .003" [0.08] / 1" [25.4]
6. MAX PERPENDICULARITY = .005" [0.13] / 1" [25.4]
7. TOP LOAD > = 400N [90 LBS]
8. MIN WALL THICKNESS IN LABEL AREA = .016" [0.41]
9. MIN HEEL WALL THICKNESS = .012" [0.30]
10. DIMENSIONS SHOWN IN [ ] ARE EXPRESSED IN MILLIMETERS
11. FOR ALL UNSPECIFIED GEOMETRY, REFERENCE 3D MODEL FILE: 000392 REV D
12. (BOXED) DIMENSIONS ARE CRITICAL TO PART FUNCTION
13. {BRACKETED} DIMENSIONS ARE MAJOR INSPECTION DIMENSIONS

REV.	DESCRIPTION	DATE	APPROVED	DRN BY
D	ADDED MOLD BASE: MB2526 CONVERTED FROM SK-7985 REV *	9/13/2021	HP	MMR
C	ADDED MOLD BASE: MB2525 CONVERTED FROM SK-7984 REV *	8/30/2021	HP	MMR
B	INITIAL PDM RELEASE: 000392 ADDED MOLD BASE: MB2524 CONVERTED FROM SK-7982 REV * MATCHED TOLERANCE FROM SK-7982 REV * UPDATED TO CURRENT STANDARDS	8/4/2021	TKS	BMG
A	CAPACITY: 457.7mL WAS 461 WGT: 35.7 GRAMS WAS 35 GRAMS	8/4/2021	TKS	KAD

CONVERSION DESCRIPTION	DATE	APPROVED	DRN BY
CONVERTED TO PRODUCTION ITEM FROM SK-6365 REV *	03/01/2017	TKS	KAD

DRAWING IS IN INCHES AND [MILLIMETERS]

TOLERANCES UNLESS OTHERWISE SPECIFIED
3 PLACE DECIMAL ± .020
2 PLACE DECIMAL ± .04
2 PLACE METRIC ± 0.50
1 PLACE METRIC ± 1.0
ANGLES ± 2 °

DO NOT SCALE DRAWING

THIS DRAWING CONTAINS CONFIDENTIAL & PROPRIETARY INFORMATION AND MAY NOT BE REPRODUCED IN WHOLE OR PART WITHOUT WRITTEN AUTHORIZATION FROM COMAR LLC

	NAME	DATE
DRAWN BY	KAD	11/01/2016
CHECKED	TKS	11/02/2016
ENG APPR	BMG	09/13/2021

TITLE: PZ-400, 400mL ROUND M53SP400 NECK FINISH

COMAR
220 LAUREL ROAD
VOORHEES, NJ 08043

MOLD NO: MB2196, MB2524, MB2525, MB2526
PDM NO: 000392 REV D
SCALE: 1:1
COMMENTS: REF 7295. AM-19548-01
PART NO: 71-0018
STATUS: STOCK
SIZE: B
SHEET: 1 OF 1
DWG NO: 71-0018
REV: D